universität innsbruck

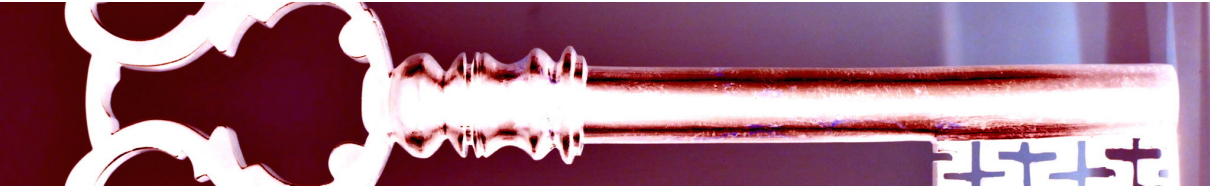

Block Ciphers

Cryptography

Rainer Böhme

24 March 2026

Agenda

1. **Abstract block ciphers**
2. Data Encryption Standard (DES)
3. Advanced Encryption Standard (AES)
4. Modes of operation

Reminder

As usual, our learning goal is to understand the principles, not to recall the specification.

Block Cipher

Block ciphers are specific symmetric encryption systems:

- family of permutations of fixed-size bit strings $\mathcal{M} = \mathcal{X} = \{0,1\}^b$
- $\mathcal{K} = \{0,1\}^\ell$ with security parameter ℓ
- **repeated use of the same key**

  $\Rightarrow$ effective $|\mathcal{K}| \ll |\mathcal{M}^*|$

Maximum achievable security:

$$H(M \mid X) \leq H(K) \ll \log_2 |\mathcal{M}^*|$$

The attacker learns something about the message by observing ciphertexts.

Heuristic Security Notions

New best case: attacker needs $2^{\ell-1}$ steps on average to make use of this knowledge.

Confusion

Complexity of the relationship between key and ciphertext

- Each bit of the ciphertext should depend on the entire key.
- Flip one key bit $\Rightarrow$ about 50 % of the ciphertext changes in a pseudo-random manner.

Diffusion

Redundancy of the message is hard to detect in the ciphertext.

Avalanche criterion:

$\forall\ (i,j) \in \{1,\ldots,b\}^2$ and any $\boldsymbol{m} \overset{\mathcal{U}}{\sim} \mathcal{M}$, $\boldsymbol{m}' \leftarrow \boldsymbol{m}$, $m'_i \leftarrow 1 - m_i$:

$$P(x_j = x'_j) = \frac{1}{2}$$

Shannon 1949

Counting Permutations

1 message bit: $|\mathcal{K}| = 2! = 1 \cdot 2 = 2$:

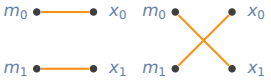

3 symbols: $|\mathcal{K}| = 3! = 1 \cdot 2 \cdot 3 = 6$:

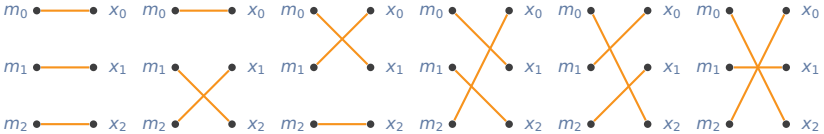

2 message bits: $|\mathcal{K}| = 4! = 1 \cdot 2 \cdot 3 \cdot 4 = 24$:

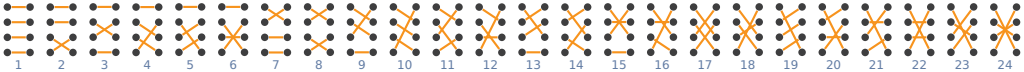

Combinatorics for Permutations

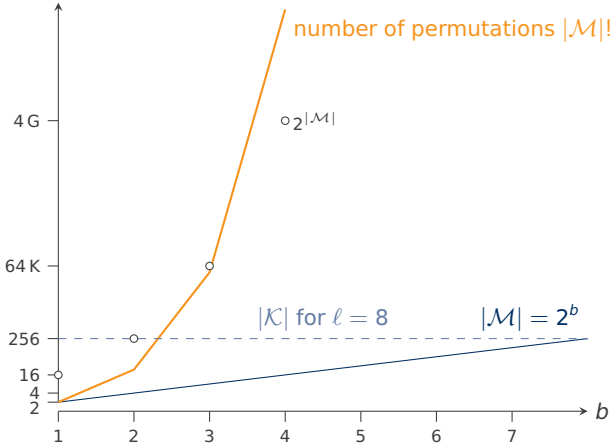

Pseudo-Randomness

Design the function encrypt as a pseudo-random permutation:

Chosen plaintext attack: efficient (PPT) algorithm $\mathcal{A}$ with "oracle" access to a permutation $\Psi : \{0,1\}^b \to \{0,1\}^b$.

Formulate a decision problem between two possible states:

- **State 0: Ψ is a random permutation**, i. e., one randomly drawn from all possible permutations.
- **State 1: Ψ is a pseudo-random permutation**, i. e., one randomly drawn from a subset of 2^ℓ permutations.

$\mathcal{A}$ outputs one bit q. For sufficiently large integers ℓ, every $\mathcal{A}$ must satisfy:

$$\underbrace{|P(q = 0 \mid \text{State } 0) - P(q = 0 \mid \text{State } 1)|}_{\text{"}\mathcal{A}\text{'s advantage is negligible in } \ell\text{"}} < \frac{1}{\text{poly}(\ell)}$$

Yao 1982 (informally also attributed to Turing)

Feistel Network

Problem: construct pseudo-random permutation $\Psi : \{0,1\}^{2m} \to \{0,1\}^{2m}$
from random function $f : \{0,1\}^m \to \{0,1\}^m$

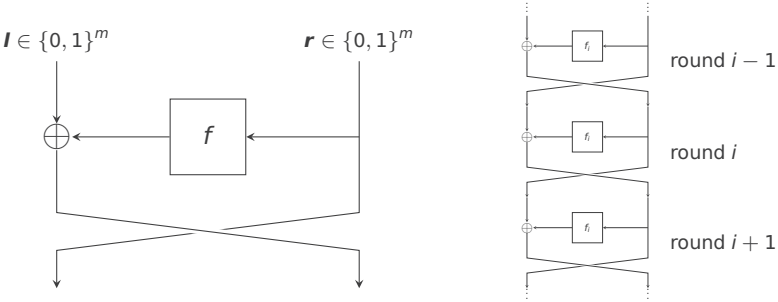

Theorems: $\Psi(f_1, f_2, f_3) \Rightarrow$ secure against chosen plaintext attacks

$\Psi(f_1, f_2, f_3, f_4) \Rightarrow \ldots$ adaptively chosen plaintext and ciphertext

Feistel et al. 1975, Luby & Rackoff 1988

Intuition

f_1, f_2, f_3 are **random functions**: <u>deterministic</u> functions drawn uniformly and independently from all possible mappings $\{0,1\}^m \to \{0,1\}^m$.

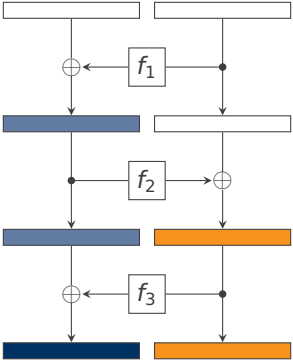

Luby & Rackoff 1988

Feistel Network

Problem: construct pseudo-random permutation $\Psi : \{0,1\}^{2m} \to \{0,1\}^{2m}$
from random function $f : \{0,1\}^m \to \{0,1\}^m$

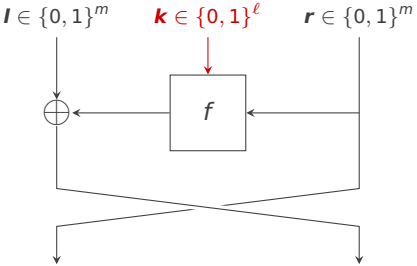

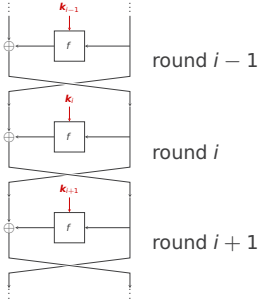

Feistel et al. 1975, Luby & Rackoff 1988

Security of Cryptographic Functions

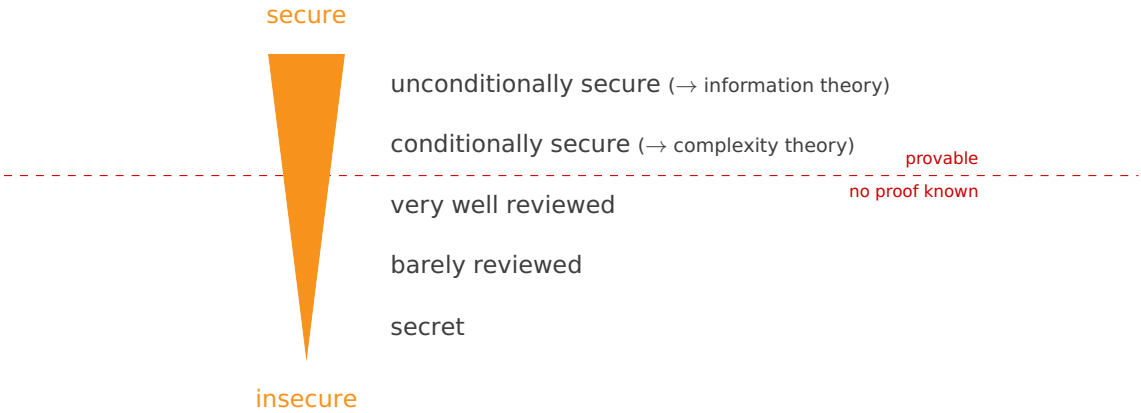

Efficiency of Symmetric Block Ciphers

Block ciphers must perform . . .

. . . **in software**		. . . **in dedicated hardware**
Commodity CPU	Smart card CPU	
limited	no	natural **parallelization**
large	tiny	expensive **memory**
64 bit	8–16 bit	arbitrary-size **registers**
strong	basic	expensive **ALUs**
e. g., arbitrary bitwise operations . . .		
↓	↓	↓
lookup tables	extensive shifts	gates and wire crossings

Agenda

1. Abstract block ciphers
2. **Data Encryption Standard (DES)**
3. Advanced Encryption Standard (AES)
4. Modes of operation

Data Encryption Standard (DES)

Symmetric block cipher block length $b = 64$ bit, key length $\ell = 56$ bit

Design

- Feistel network with 16 rounds
- Modified version of IBM's "Lucipher"
- Standardized by the NBS (since 1988: NIST) in 1977
- Wide adoption despite criticism of short key length

Security

- Remarkably strong against analytical attacks
- Best known linear cryptanalysis needs 2^{41} CT–PT pairs
- 1990s: practical brute-force attacks
- More secure variant: Triple-DES with $\ell = 112$ bit, EDE, $\boldsymbol{k}_1 = \boldsymbol{k}_3$

DES Round Function

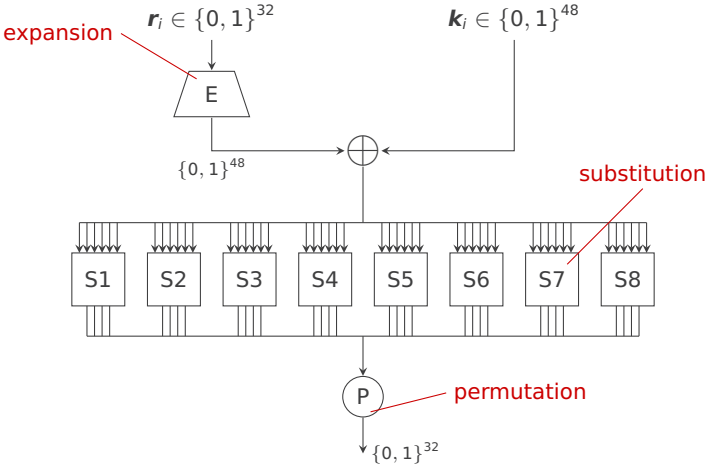

DES Key Schedule

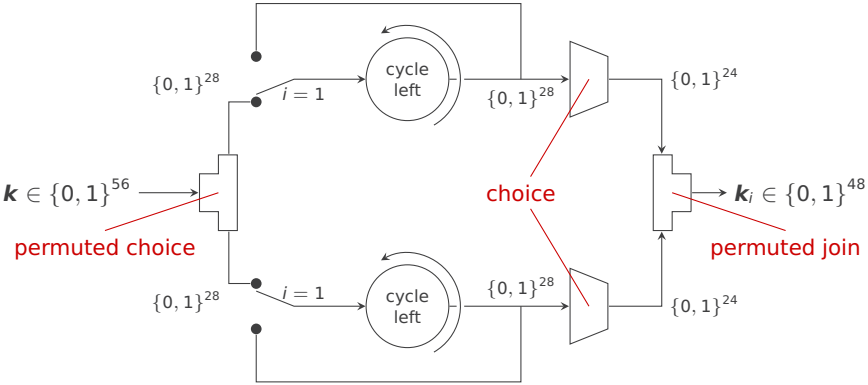

DES “Mysteries”

Complementation property

$$\overline{\text{encrypt}_{\text{DES}}(\boldsymbol{m}, \boldsymbol{k})} = \text{encrypt}_{\text{DES}}(\overline{\boldsymbol{m}}, \overline{\boldsymbol{k}})$$

($\overline{\boldsymbol{s}}$ is the bitwise complement of sequence $\boldsymbol{s}$.)

Selected known brute-force attacks

- 1980 Hellman: US$ 4 million + 2 years, 100 keys/day
- 1993 Wiener: US$ 1 million, 7 keys/day
- 1997 crowdsourcing using idle Internet nodes: 4 months/key
- 1998 EFF DES-Cracker: US$ 0.25 million, 5 days/key
- **For comparison:** 2026 Bitcoin network does 2^{69} crypto operations per second.

Puzzles around the initial/final permutation and S-box design.

Biham & Shamir 1990, Coppersmith 1994, www.blockchain.com 2026

Differential Cryptanalysis

Distribution of DES S1 differentials

	$\boldsymbol{r}_1 \oplus \boldsymbol{r}_2$									
$S1(\boldsymbol{r}_1) \oplus S1(\boldsymbol{r}_2)$	00	01	02	03	...	0C	...	34	...	3E	3F
0	64	0	0	14		0		0		4	4
1	0	0	0	4		0		8		8	8
2	0	0	0	2		0		16		2	4
3	0	6	8	2		8		6		2	2
4	0	0	0	10		0		2		2	4
5	0	2	4	6		6		0		4	0
6	0	4	4	4		6		0		4	2
7	0	4	4	2		0		12		14	4
8	0	0	0	6		0		6		4	4
9	0	10	6	4		6		0		2	2
A	0	12	8	4		0		6		0	4
B	0	4	6	0		4		0		2	8
C	0	10	12	2		6		0		0	8
D	0	6	6	2		6		8		8	6
E	0	2	4	2		14		0		4	2
F	0	4	2	0		2		6		4	2

Example: Biham & Shamir 1990

Insecurity of DES Variants

Differential cryptanalysis	# of chosen plaintexts
DES	2^{47}
Modifications	
Permutation:	
Random	2^{47}
Identity	2^{19}
Order of S-boxes	2^{38}
Random S-boxes	2^{21}
Uniform S-boxes	2^{26}
No expansion	2^{26}
Order of expansion and subkey XOR	2^{44}
Addition instead of XOR	2^{31}

Source: Cetin Koc's speaking notes (p. 48). https://www.ukma.edu.ua/ yubod/teach/coding/crypto/diffanalysis.pdf

Agenda

1. Abstract block ciphers
2. Data Encryption Standard (DES)
3. **Advanced Encryption Standard (AES)**
4. Modes of operation

AES Competition (1997–2001)

NIST's requirements for the Advanced Encryption Standard (AES):

- more secure than Triple-DES,
- more efficient than Triple-DES,
- no patents.

Feistel networks			**SP networks**		**Others**
like DES		extended	general	square-based	
DEAL	DFC	Cast-256	SAFER+	Crypton	*Frog*
E2	*Loki97*	MARS*	Serpent*	**Rijndael****	*HPC*
Magenta	RC6*				
Twofish*					

* finalist; ** winner (AES); *italics* for major attacks

Advanced Encryption Standard (AES)

AES-128	AES-192	AES-256
$\ell = 128$ bit 10 rounds	$\ell = 192$ bit 12 rounds	$\ell = 256$ bit 14 rounds
sensitive	classified	(top) secret

Block size $b = 128$ bit

[0;7] $\boldsymbol{m}$	[32;39] $\boldsymbol{m}$	[64;71] $\boldsymbol{m}$	[96;103] $\boldsymbol{m}$
[8;15] $\boldsymbol{m}$	[40;47] $\boldsymbol{m}$	[72;79] $\boldsymbol{m}$	[104;111] $\boldsymbol{m}$
[16;23] $\boldsymbol{m}$	[48;55] $\boldsymbol{m}$	[80;87] $\boldsymbol{m}$	[112;119] $\boldsymbol{m}$
[24;31] $\boldsymbol{m}$	[56;63] $\boldsymbol{m}$	[88;95] $\boldsymbol{m}$	[120;127] $\boldsymbol{m}$

- Mathematical elegance (ambivalent for a cipher)
- Fast in software and hardware; instruction-level support on many CPUs
- 5 778 implementations validated by NIST (2002–2018)
- No major attack despite initial rumours.

Daemen & Rijmen 1999

AES Substitution Permutation Network

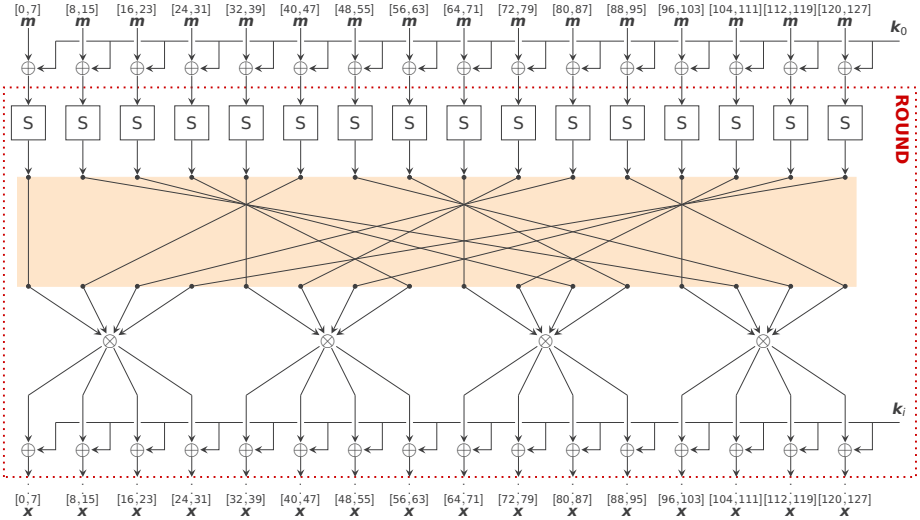

AES Substitution Permutation Network

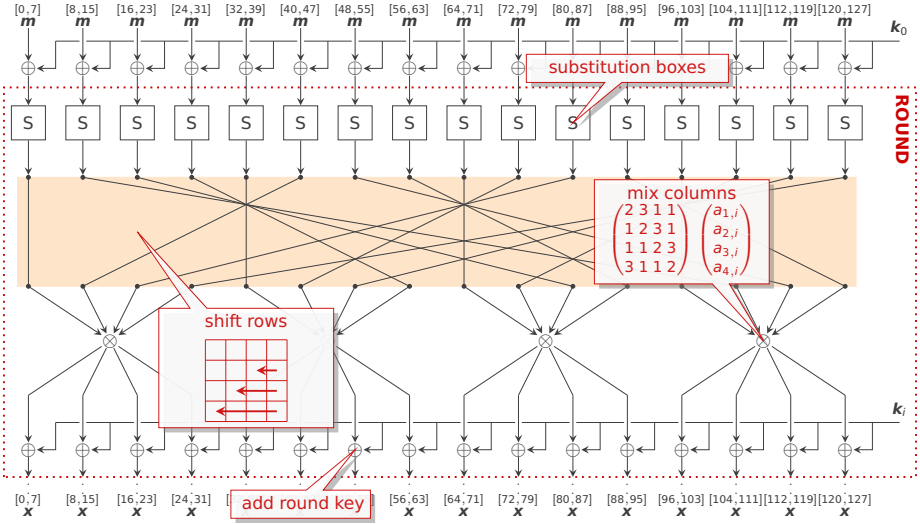

AES Substitution Box

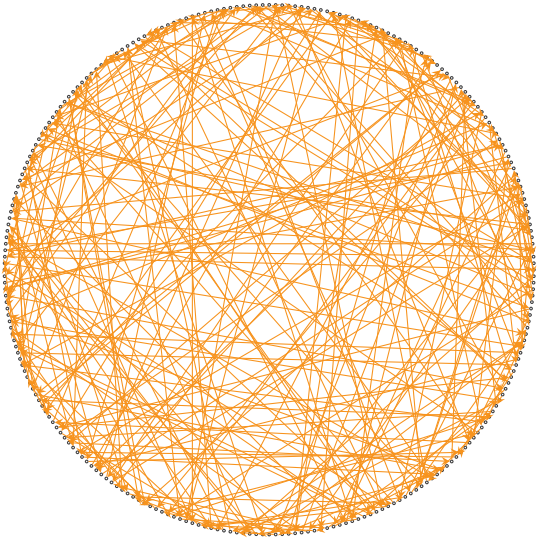

Construction principle:

1. find multiplicative inverses in $\mathrm{GF}(2^8)$
2. set $0^{-1} \leftarrow 0$
3. calculate affine transformation

$$\begin{pmatrix} 1&0&0&0&1&1&1&1 \\ 1&1&0&0&0&1&1&1 \\ 1&1&1&0&0&0&1&1 \\ 1&1&1&1&0&0&0&1 \\ 1&1&1&1&1&0&0&0 \\ 0&1&1&1&1&1&0&0 \\ 0&0&1&1&1&1&1&0 \\ 0&0&0&1&1&1&1&1 \end{pmatrix} \begin{pmatrix} x_0^{-1} \\ x_1^{-1} \\ x_2^{-1} \\ x_3^{-1} \\ x_4^{-1} \\ x_5^{-1} \\ x_6^{-1} \\ x_7^{-1} \end{pmatrix} + \begin{pmatrix} 1 \\ 1 \\ 0 \\ 0 \\ 0 \\ 1 \\ 1 \\ 0 \end{pmatrix}$$

The result is a permutation $\Psi_{\mathrm{AES}} : \{0,1\}^8 \to \{0,1\}^8$.

Affine Transformation as Logic Circuit

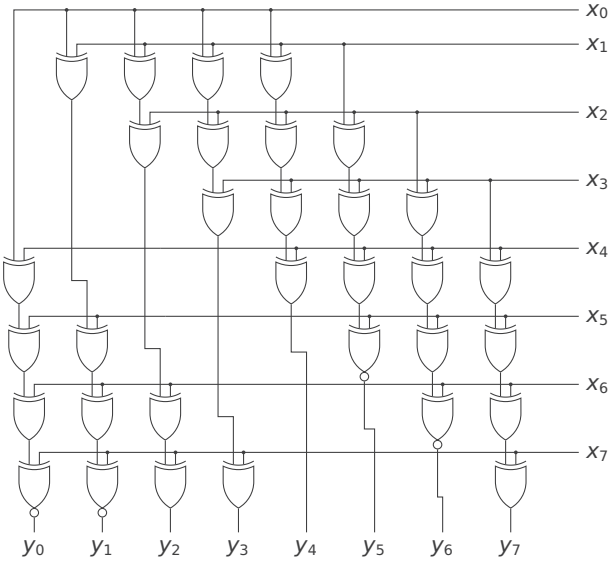

AES Key Schedule

$\boldsymbol{k}_0$ is the key.

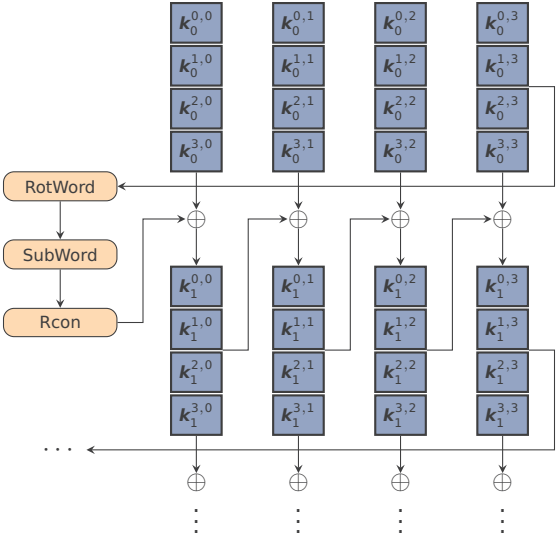

AES Key Schedule (cont'd)

RotWord

- Rotates a 32-bit word one byte to the left

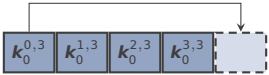

SubWord

- Applies the AES S-Box to each byte of the 32-bit word

Rcon

- $\mathrm{Rcon}(i) = 2^{i-1}$ in $\mathrm{GF}(2^8)$, usually stored as a lookup table
- In each round i, look up $\mathrm{Rcon}(i)$ and XOR it to the leftmost byte $k_i^{j,l}$.

Agenda

1. Abstract block ciphers
2. Data Encryption Standard (DES)
3. Advanced Encryption Standard (AES)
4. **Modes of operation**

Modes of Operation

Block cipher:

$$\boldsymbol{m} \in \{0,1\}^b \mapsto \boldsymbol{x} \in \{0,1\}^b$$

- b is given by cipher.

What we need:

$$\boldsymbol{m} \in \{0,1\}^n \mapsto \boldsymbol{x} \in \{0,1\}^{n'}$$

- n is given by application, often $n \gg b$.

Approach:

$$\boldsymbol{m} = \boldsymbol{m}_0 \| \boldsymbol{m}_1 \| \ldots \| \boldsymbol{m}_{\max} \quad \text{with} \quad \boldsymbol{m}_i \in \{0,1\}^b$$

- What is the security impact?

Electronic Code Book (ECB)

$\boldsymbol{m}$ plaintext block
$\boldsymbol{x}$ ciphertext block
$\boldsymbol{k}$ secret key

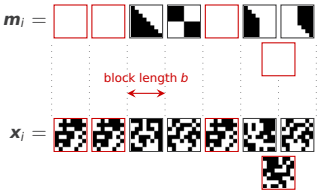

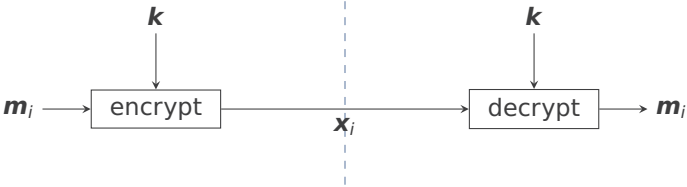

Cipher Block Chaining (CBC)

$\boldsymbol{m}$ plaintext block
$\boldsymbol{x}$ ciphertext block
$\boldsymbol{k}$ secret key
$\boldsymbol{v}_0$ initialization vector

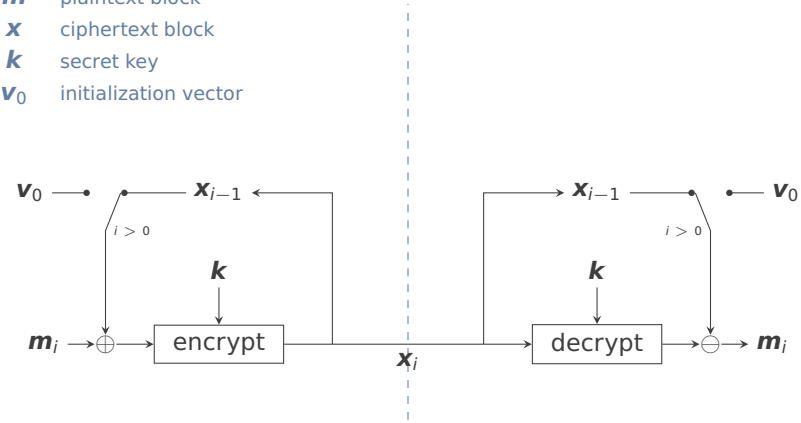

Cipher Block Chaining (CBC)

$\boldsymbol{m}$ plaintext block
$\boldsymbol{x}$ ciphertext block
$\boldsymbol{a}$ authentication key
$\boldsymbol{v}_0$ initialization vector

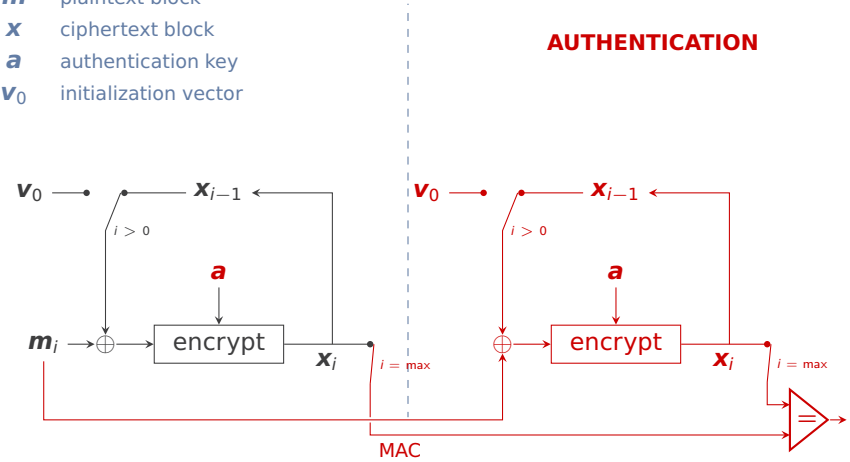

Cipher Feedback (CFB)

$\boldsymbol{m}$ plaintext block
$\boldsymbol{x}$ ciphertext block
$\boldsymbol{k}$ secret key
$\boldsymbol{v}_0$ initialization vector

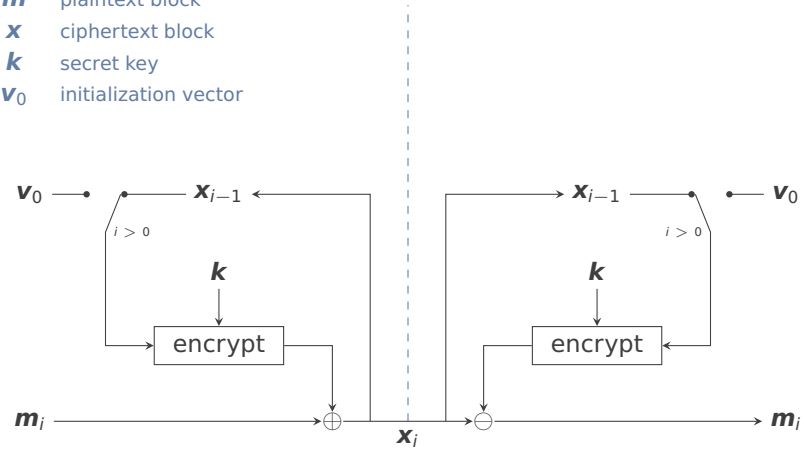

Cipher Feedback (CFB)

$\boldsymbol{m}$ plaintext block
$\boldsymbol{x}$ ciphertext block
$\boldsymbol{a}$ authentication key
$\boldsymbol{v}_0$ initialization vector

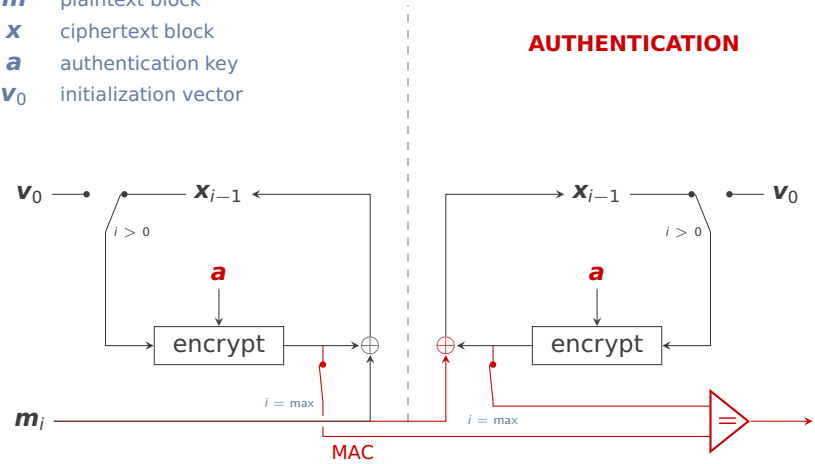

Output Feedback (OFB)

$\boldsymbol{m}$ plaintext block
$\boldsymbol{x}$ ciphertext block
$\boldsymbol{k}$ secret key
$\boldsymbol{v}$ state vector

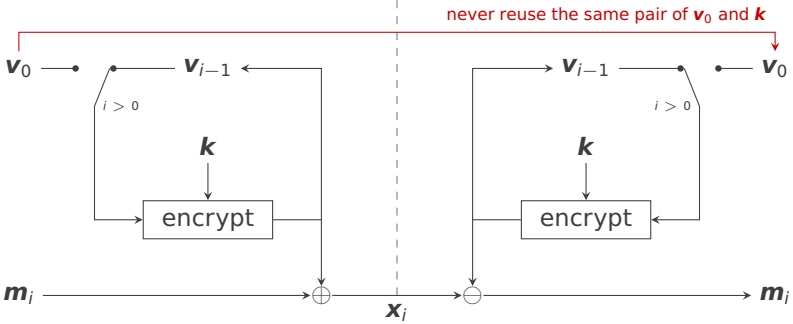

Counter Mode (CTR)

$\boldsymbol{m}$ plaintext block
$\boldsymbol{x}$ ciphertext block
$\boldsymbol{k}$ secret key
$\boldsymbol{v}_0$ initialization vector

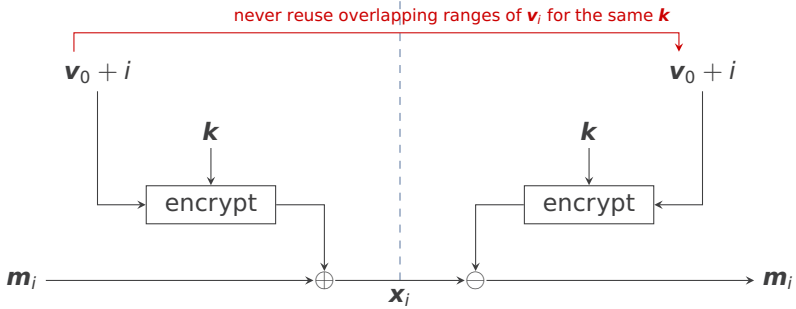

Summary

	DES	**AES**
Block length	$b = 64$	$b = 128$
Key space	$\ell = 56$	$\ell \in \{128, 192, 256\}$
Principle	Feistel network (non-invertible functions)	square SP network (everything invertible)
Reviewed	very well	very well
Oddities	quite some	not known

Symmetric block ciphers are the workhorses of almost all crypto applications.

Use AES with CBC or CTR unless you have very good reasons to deviate.

Do not modify or invent your own block cipher!

Syllabus

Summer Term 2026

	05.03.26	1.	Introduction, basic terminology	
	12.03.26	2.	Probability, information, and coding theory for cryptography	
	19.03.26	3.	Symmetric encryption, perfect secrecy	
Tue	24.03.26	4.	Block ciphers	HSB 9
	16.04.26	5.	Cryptanalysis of classical ciphers	
	23.04.26	6.	Number theory for cryptography	
	30.04.26	7.	Computational complexity for cryptography	
	07.05.26	8.	Asymmetric encryption	
	21.05.26	9.	Message authentication	
	28.05.26	10.	Elliptic curve cryptography	
	11.06.26	11.	Commitments, zero-knowledge, and secret sharing	
Tue	23.06.26	12.	Q & A for the exam	HSB 9
	25.06.26		**Written exam**	

Last update: March 24, 2026